HIKMICRO

HIKMICRO

RADAR LEVEL METER

HIKMICRO

Features and Benefits

- Adopting 80 GHZ FMCW technology, the resolution is higher and the detection performance is more stable.
- Low power consumption design, lower starting voltage, and stronger load capacity.
- Adapting to more usage scenarios with a variety of antenna structures.
- Supports APP configuration with Bluetooth and host computer software, making remote debugging and installation more efficient.
- Intelligent diagnostic system and 24/7 self-checking make equipment operation safer.
- With a response time of less than 1 second, perfectly suited for complex scenarios with rapid level changes, such as reaction vessels.
- High device stability with false echo suppression algorithm and intelligent interference shielding.
- Self-learning algorithm automatically adjusts algorithm parameters according to real-time data to improve radar adaptability.
- The maximum measurement range is up to 120 m, covering measurements of large reservoirs and material warehouses.

HIKMICRO

Contents

Contents 3

1. Product Introduction 4

1.1. Application 4

1.2. Measuring Principle 4

2. Specification Overview 5

2.1. Flange with Lens Antenna Type (Swiveling Holder & Purge) 5

2.2. Plastic Horn Antenna Type 6

2.3. Flange with Encapsulated Antenna Type (3° Beam Angle) 6

2.4. Flange with Encapsulated Antenna Type (6° Beam Angle) 7

2.5. Thread with Integrated Antenna Type 7

3. Dimensions 8

3.1. Transmitter 8

3.2. Flange with Lens Antenna Type (Swiveling Holder & Purge) 8

3.4. Flange with Encapsulated Antenna Type (3° Beam Angle) 12

3.5. Flange with Encapsulated Antenna Type (6° Beam Angle) 14

3.6. Thread with Integrated Antenna Type 16

3.7. Thread with Integrated Antenna Type (14° Beam Angle) 18

3.8. Flange size 20

4. Electrical Connection 22

5. Installation 23

5.1. Mounting Position – Liquids 23

5.2. Mounting Position – Bulk Solids 26

6. Ordering Information 27

6.1. Model Code Description 27

6.2. Selection Table 31

1. Product Introduction

1.1. Application

HIKMICRO LRG10 series radar level meter can continuously measure the height of materials (solid or liquid) in closed or open containers during industrial production. It can be installed in various metal or non-metal containers or pipelines to continuously measure the level of liquids, slurries and granular materials. It is suitable for places with strong dust, steam, corrosion, stirring and volatile gases.

LRG10 series radar level meter has low emission energy and is harmless to human body and environment. It is also not affected by the relative density of the medium, the change of dielectric constant, and does not require on-site calibration.

1.2. Measuring Principle

LRG10 series radar level meter adopts W-band (80GHz) frequency modulated continuous wave technology. It is suitable for continuous level measurement of various liquid and solid medium, with a maximum range of 120m. Radar level meter is an advanced measurement system based on frequency modulated continuous wave technology. Radar level meter transmits continuous microwave signal through antenna sensor, and the frequency of the transmitted signal is linearly modulated by saw tooth wave. When the continuously transmitted microwave signal encounters the surface of the measured medium, due to the sudden change of dielectric constant, part of the energy of the microwave signal is continuously reflected back and received by the lens antenna system.

There is always a difference between the frequency of the received signal and the frequency of the transmitted signal, and the difference is proportional to the distance from the radar antenna to the surface of the measured medium. The larger the frequency difference, the farther distance from the surface of the measured medium. The distance from the measured medium to the radar's flange can be calculated by formula (1) $h=1/2 \cdot c \cdot \nabla F$, where h is the distance from the measurement reference surface to the measured medium, c is the propagation speed of light (electromagnetic wave) in vacuum, ∇F is the frequency difference between the received signal and the transmitted signal. And then according to the empty material position set by the user, the material height H can be calculated by formula (2) $H=L-h$, where H is the material height, L is the range, the distance between the radar flange and the bottom of the material.

2. Specification Overview

2.1.Flange with Lens Antenna Type (Swiveling Holder & Purge)

	Measuring Range	0~10 m / 0~30 m / 0~50 m / 0~120 m
	Process Fitting	DN80 and above
	Process Connection Material	304 stainless steel/316L stainless steel
	Process Temperature	-40~150 ℃ (The high temperature version can reach up to 250℃)
	Process Pressure	-0.1~0.25 MPa
	Antenna Size	74 mm
	Main Wetted Parts	304 stainless steel + PTFE / 316L stainless steel + PTFE/304 stainless steel + PP / PTFE
	Frequency	W-Band (80 GHz)
	Accuracy	±2 mm / ±5 mm
	Protection Rating	IP67
	Output Signal	4~20 mA, HART (Two-wire)
	Power Supply	24V DC（12~36V DC）
	Application	Bulk solids with strong dust

2.2. Plastic Horn Antenna Type

	Measuring Range	0~10 m / 0~30 m / 0~50 m / 0~120 m
	Process Fitting	Mounting strap / DN80 and above
	Process connection material	304 stainless steel/316L stainless steel/PP
	Process Temperature	-40~80 ℃
	Process Pressure	-0.1~4 MPa
	Antenna size	74 mm
	Main wetted parts	PP
	Frequency	W-Band (80 GHz)
	Accuracy	±2 mm / ±5 mm
	Protection Rating	IP67
	Output Signal	4~20 mA, HART (Two-wire)
	Power Supply	24V DC（12~36V DC）
	Application	Liquids, bulk solids

2.3. Flange with Encapsulated Antenna Type (3° Beam Angle)

	Measuring Range	0~10 m / 0~30 m / 0~50 m / 0~120 m
	Process Fitting	DN80 and above
	Process connection material	304 stainless steel/316L stainless steel
	Process Temperature	-40~150 ℃ (The high temperature version can reach up to 250℃)
	Process Pressure	-0.1~4 MPa
	Antenna size	74 mm
	Main wetted parts	304 stainless steel + PTFE / 316L stainless steel + PTFE / 304 stainless steel + PP / PTFE
	Frequency	W-Band (80 GHz)
	Accuracy	±2 mm / ±5 mm
	Protection Rating	IP67
	Output Signal	4~20 mA, HART (Two-wire)
	Power Supply	24V DC（12~36V DC）
	Application	Liquids, bulk solids

2.4. Flange with Encapsulated Antenna Type (6° Beam Angle)

	Measuring Range	0~10 m / 0~30 m
	Process Fitting	DN50 and above
	Process connection material	304 stainless steel/316L stainless steel
	Process Temperature	-40~150 ℃ (The high temperature version can reach up to 250℃)
	Process Pressure	-0.1~4 MPa
	Antenna size	42 mm
	Main wetted parts	304 stainless steel + PTFE / 316L stainless steel + PTFE / 304 stainless steel + PP / PTFE
	Frequency	W-Band (80 GHz)
	Accuracy	±2 mm
	Protection Rating	IP67
	Output Signal	4~20 mA, HART (Two-wire)
	Power Supply	24V DC (12~36V DC)
	Application	Liquids, bulk solids

2.5. Thread with Integrated Antenna Type

	Measuring Range	0~10 m / 0~30 m
	Process Fitting	Threads: G1½,G ¾, NPT 1½, NPT ¾
	Process connection material	304 stainless steel/316L stainless steel
	Process Temperature	-40~150 ℃ (The high temperature version can reach up to 250℃)
	Process Pressure	-0.1~1.6 MPa
	Antenna size	34 mm/14.5 mm
	Main wetted parts	G1½, NPT 1½: 304 stainless steel + PTFE / 316L stainless steel + PTFE G ¾, NPT ¾: 304 stainless steel + PEEK / 316L stainless steel + PEEK
	Frequency	W-Band (80 GHz)
	Accuracy	±2 mm
	Protection Rating	IP67
	Output Signal	4~20 mA, HART (Two-wire)
	Power Supply	24V DC (12~36V DC)
	Application	Liquids, bulk solids

3. Dimensions

3.1. Transmitter

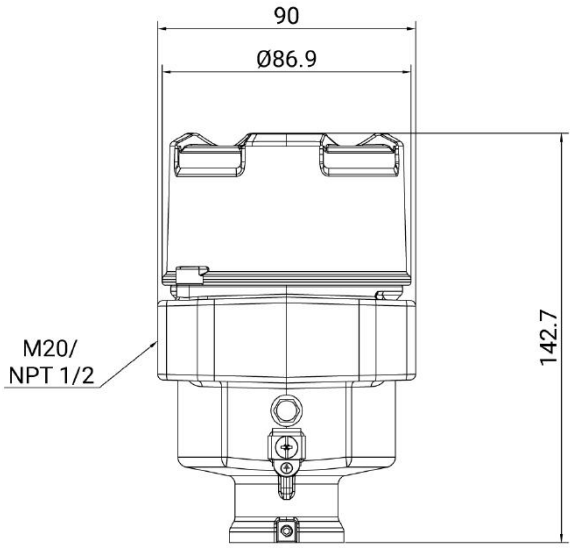

Unit: mm

3.2. Flange with Lens Antenna Type (Swiveling Holder & Purge)

Process Temperature (Unit: mm)	
80 ℃	150 ℃
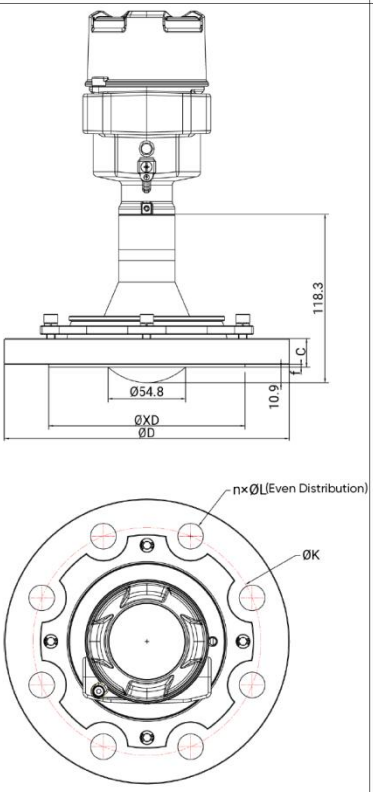	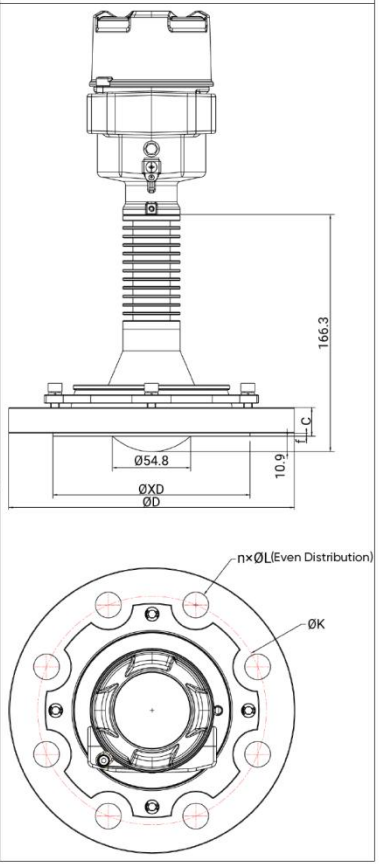

Process Temperature (Unit: mm)	
200 ℃	250 ℃
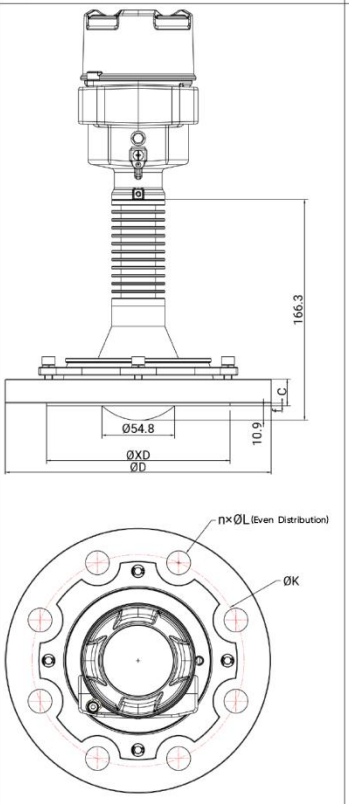	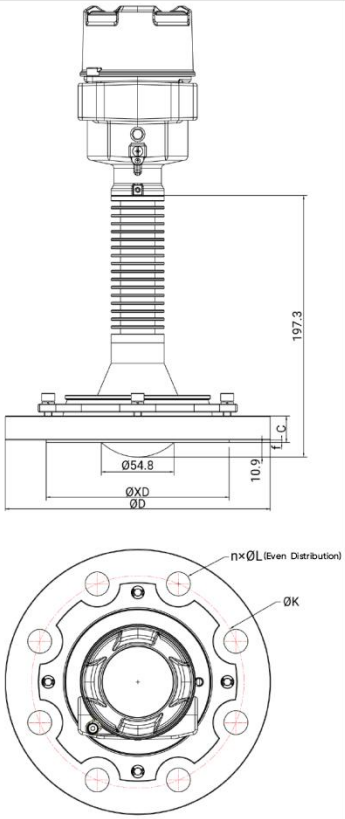

3.3. Plastic Horn Antenna Type

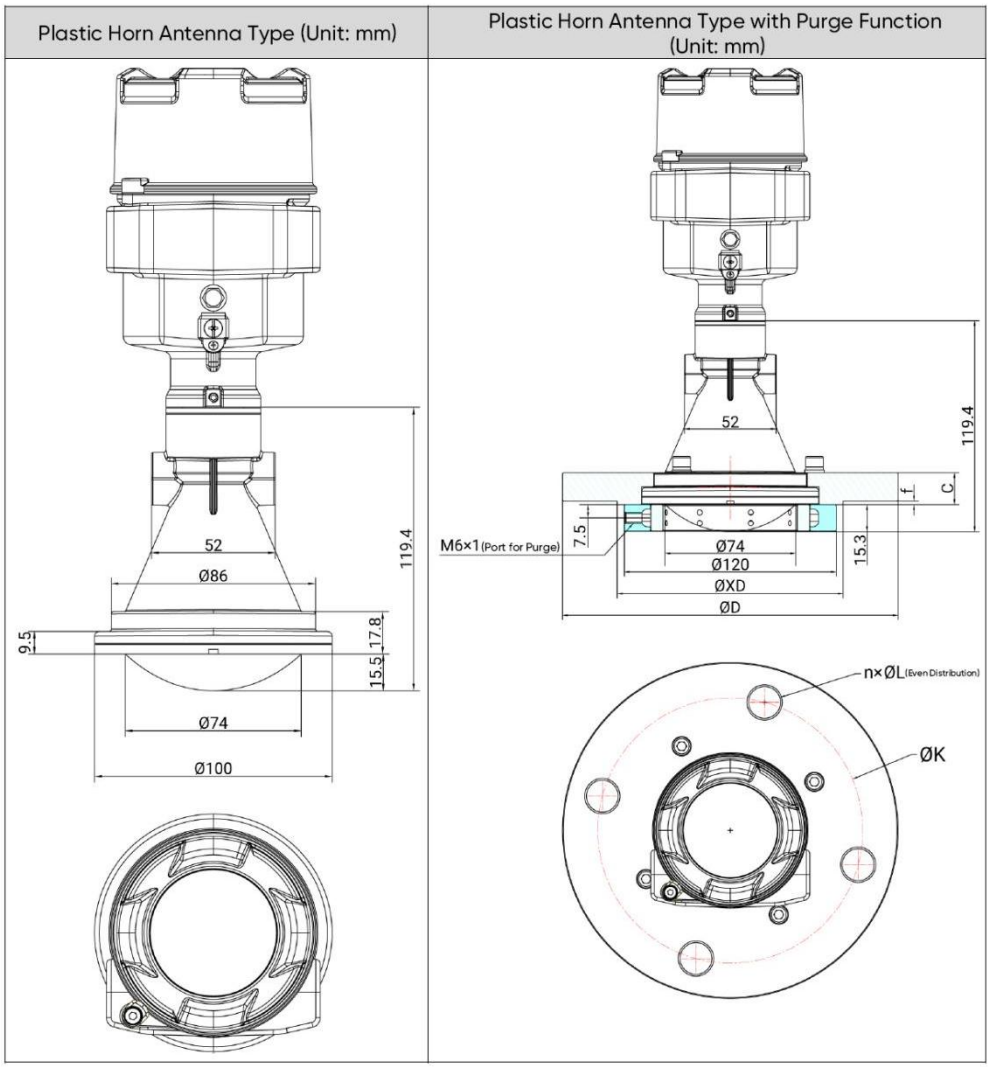

Plastic Horn Antenna Type without Mounting Strap

Plastic Horn Antenna Type with Flange Adapter (Unit: mm)	Plastic Horn Antenna Type with Mounting Strap (Unit: mm)
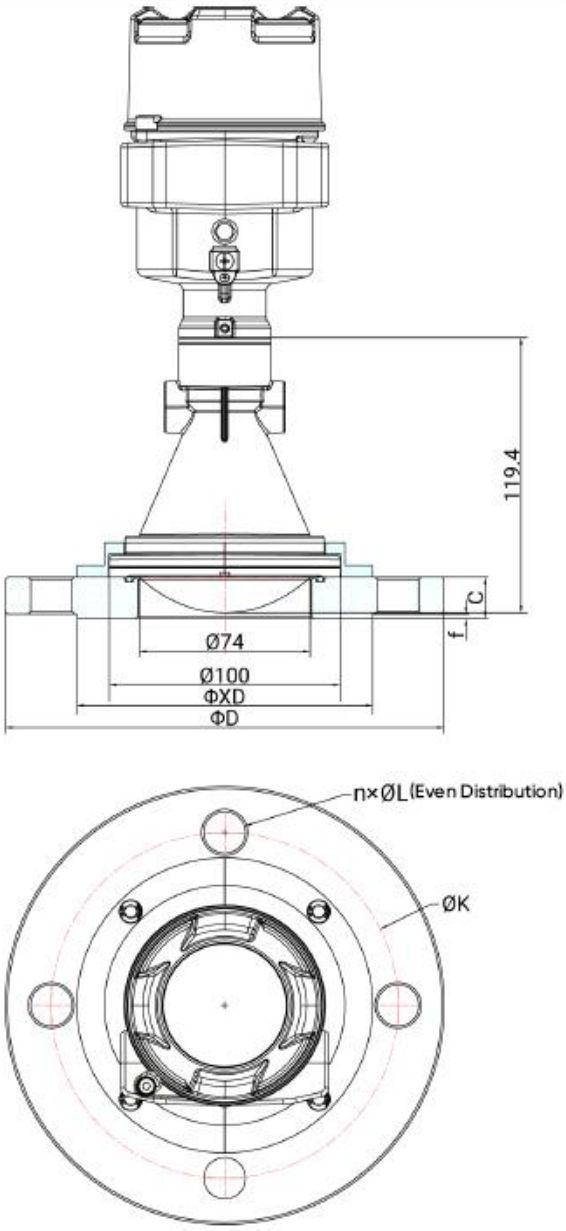	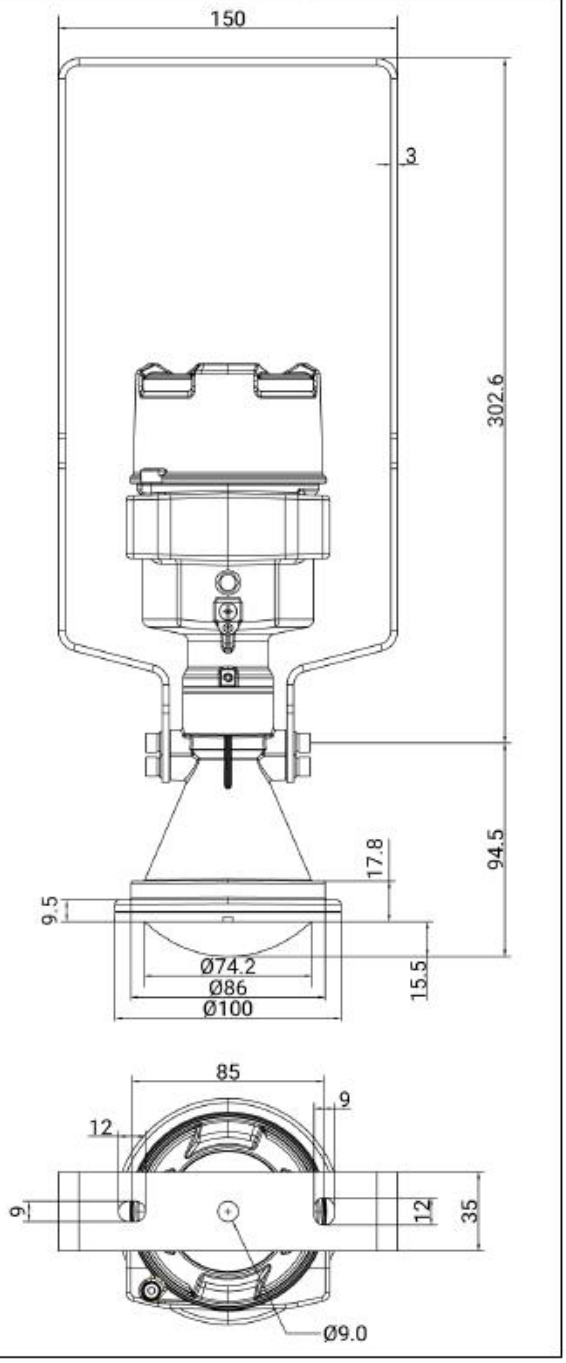

Plastic Horn Antenna Type with Mounting Strap

3.4. Flange with Encapsulated Antenna Type (3° Beam Angle)

Process Temperature (Unit: mm)	
80 ℃	150 ℃
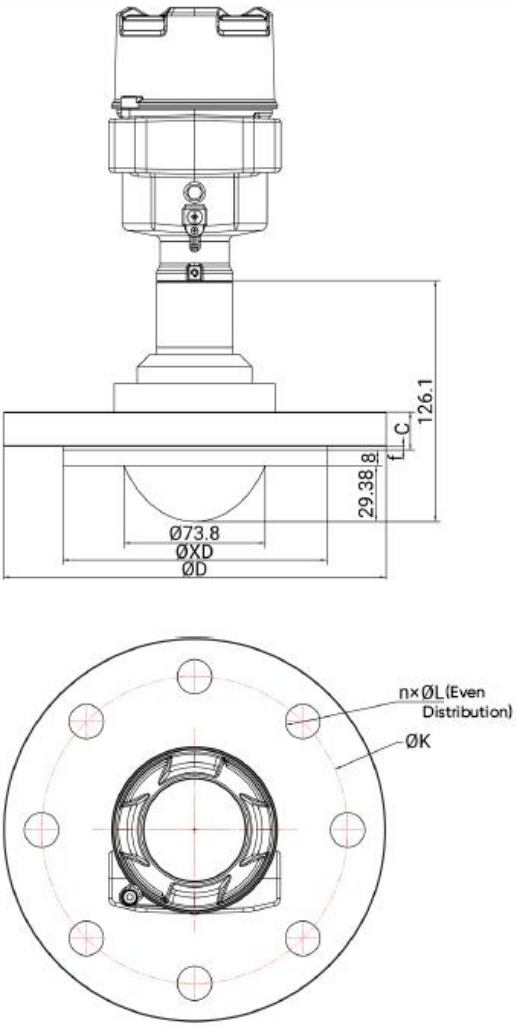	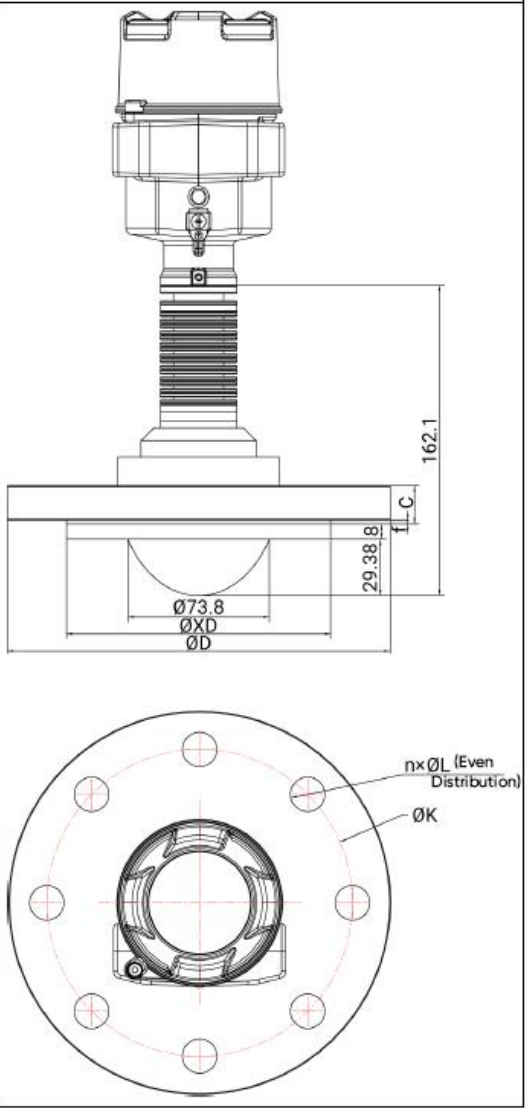

Process Temperature (Unit: mm)	
200 ℃	250 ℃
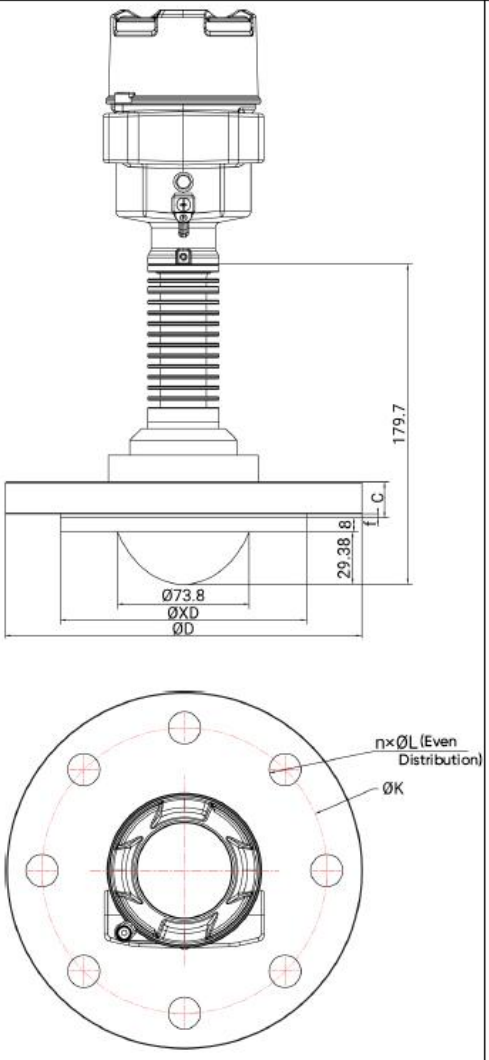	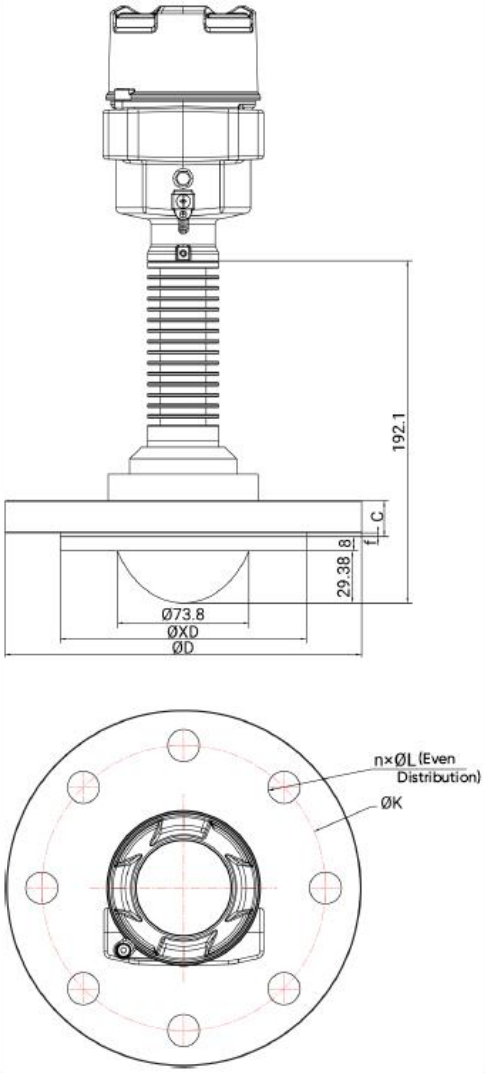

3.5. Flange with Encapsulated Antenna Type (6° Beam Angle)

Process Temperature (Unit: mm)	
80 ℃	150 ℃
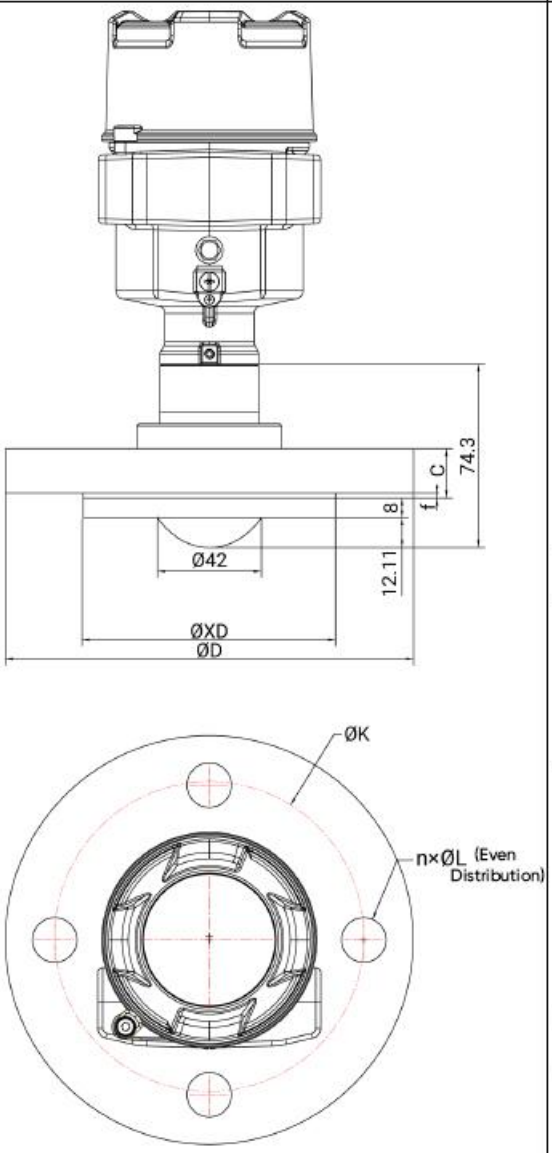	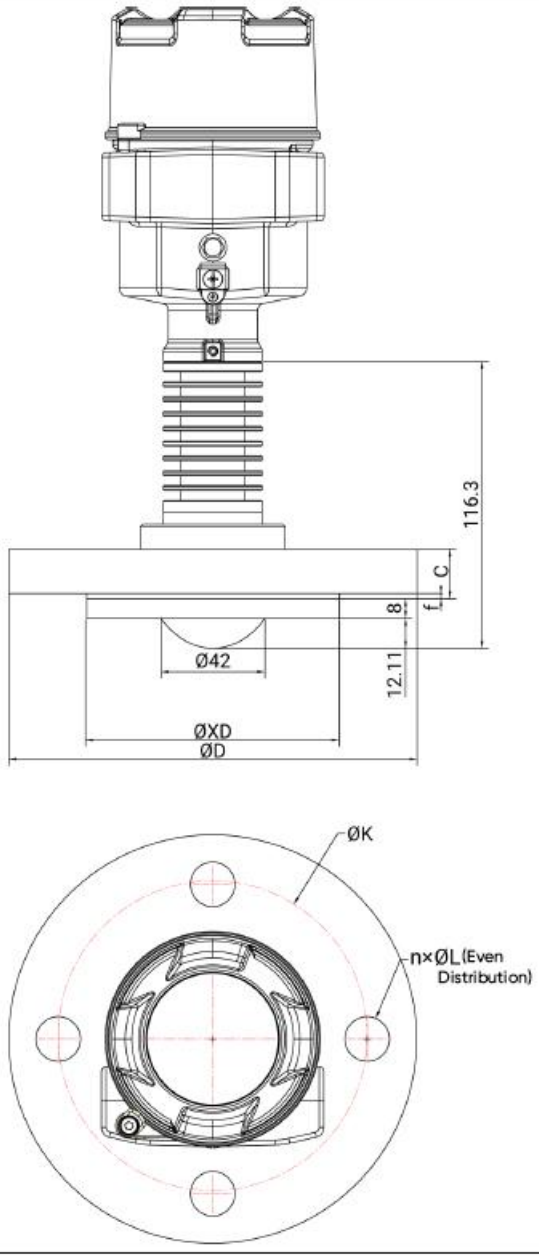

Process Temperature (Unit: mm)	
200 ℃	250 ℃
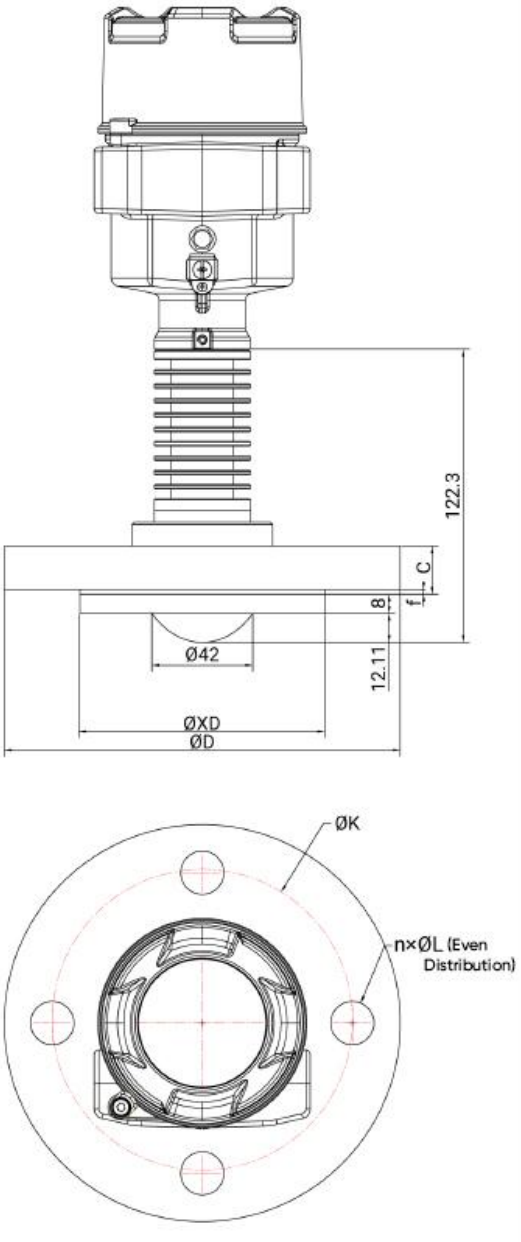	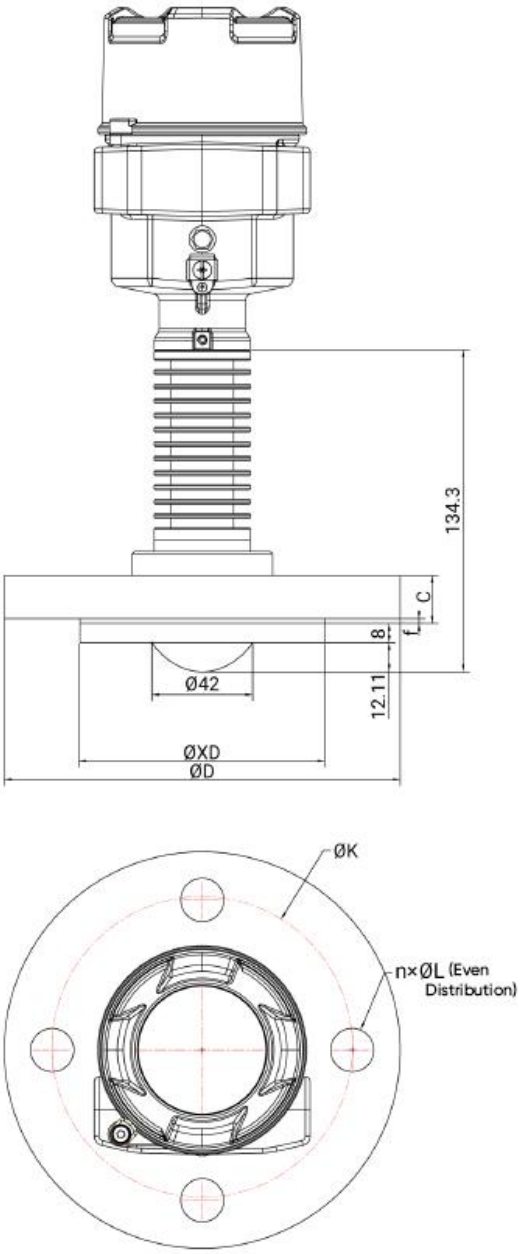

3.6. Thread with Integrated Antenna Type (8° Beam Angle)

Process Temperature (Unit: mm)	
80 ℃	150 ℃
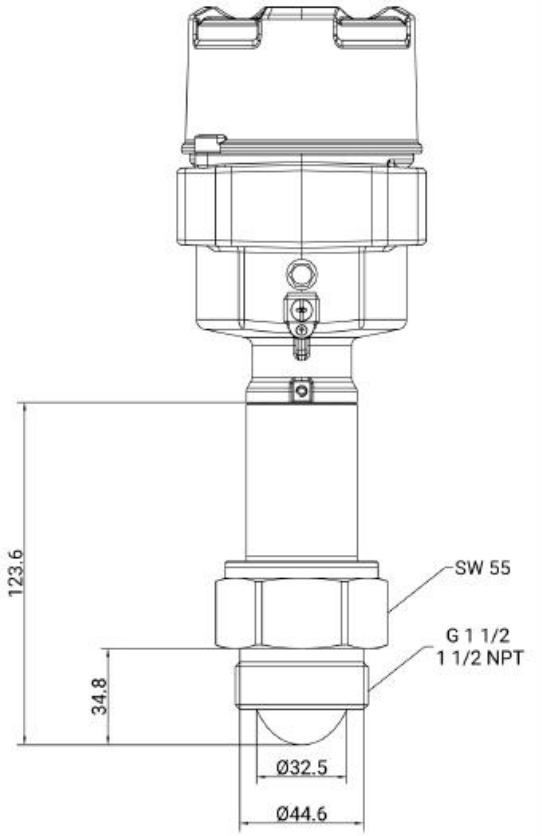	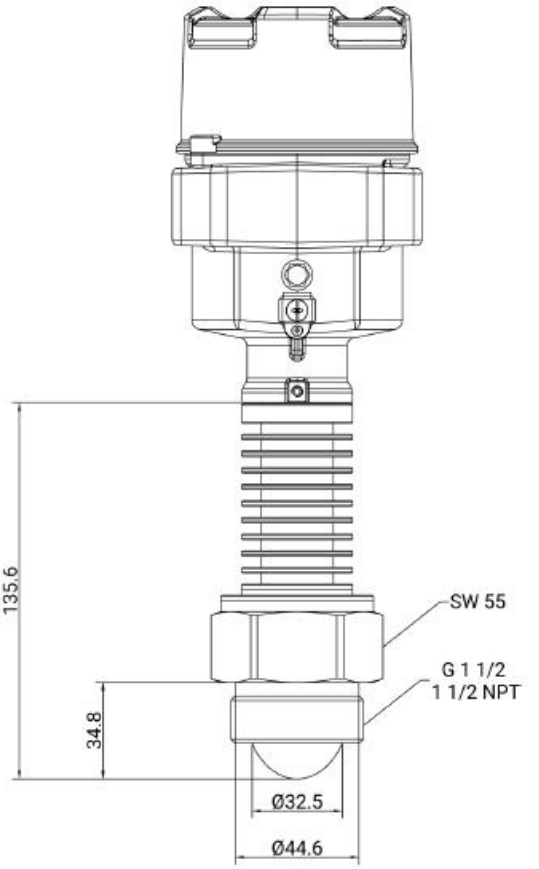

Process Temperature (Unit: mm)	
200 ℃	250 ℃
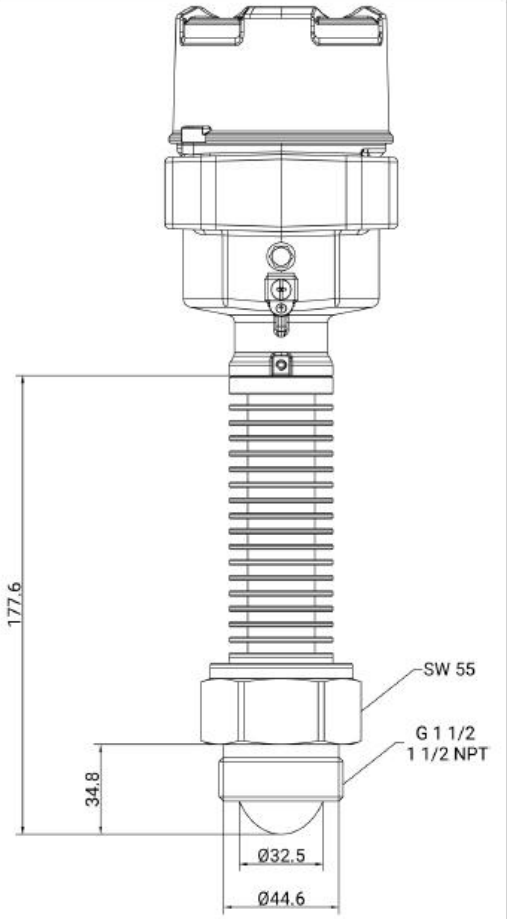	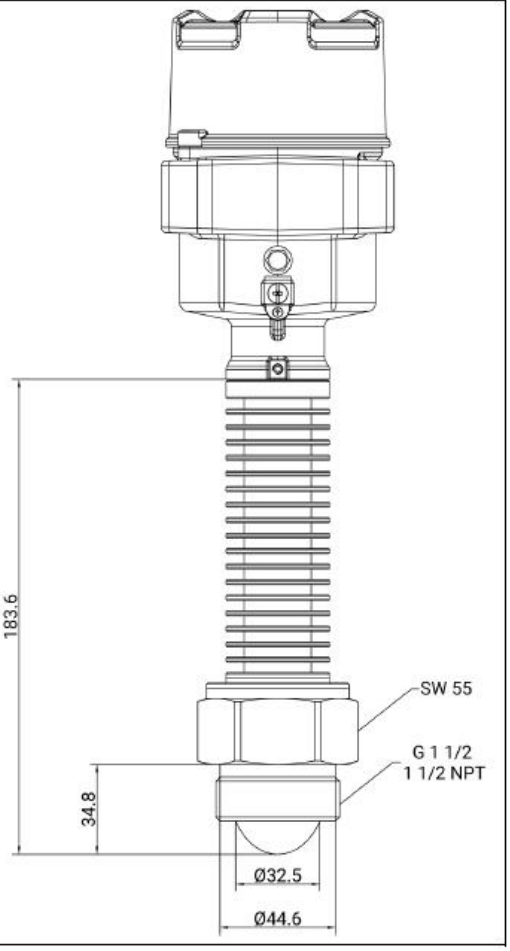

3.7. Thread with Integrated Antenna Type (14° Beam Angle)

Process Temperature (Unit: mm)	
80 ℃	150 ℃
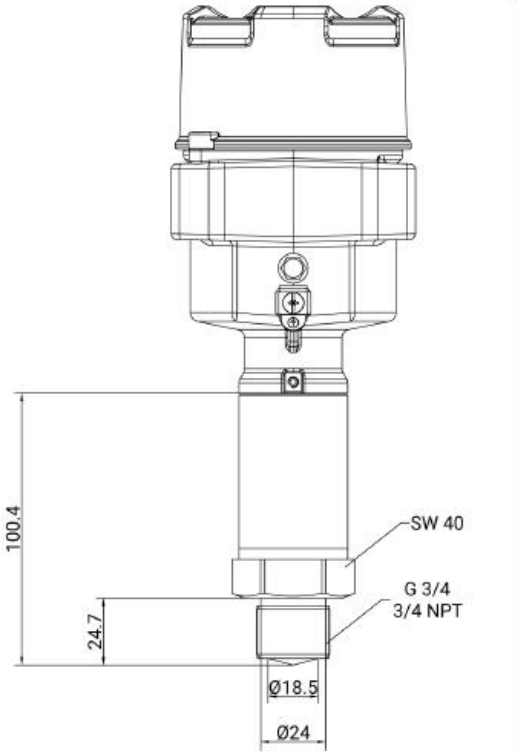	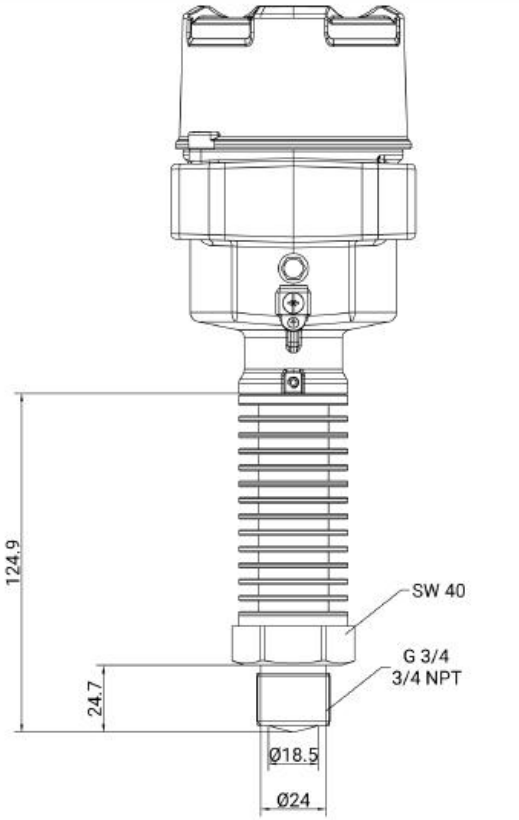

Process Temperature (Unit: mm)	
200 ℃	250 ℃
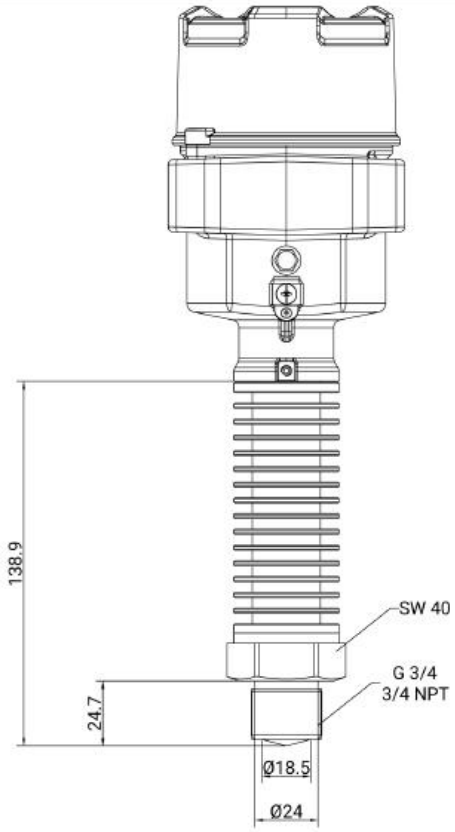	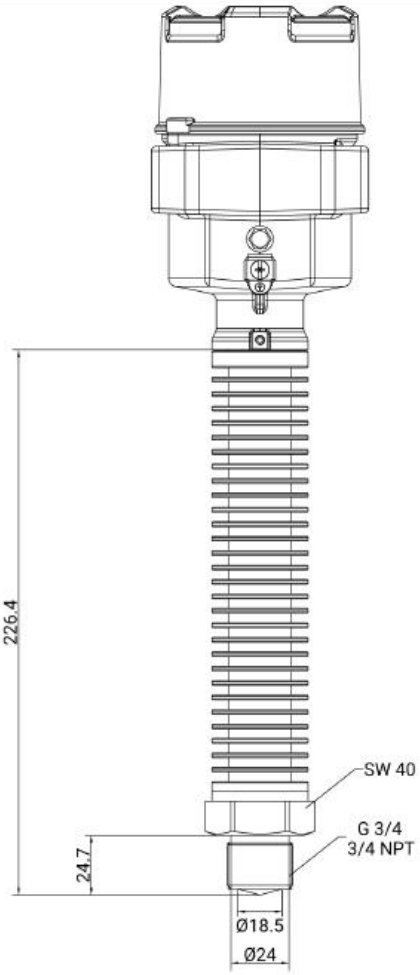

3.8. Flange size

Flange Specifications		Dimension (Unit: mm)						
Diameter	Pressure Standard	D	XD	f	C	n	L	K
DN50	PN2.5	140	90	2	16	4	14	110
DN50	PN6	140	90	2	12	4	14	110
DN50	PN10	165	102	2	18	4	18	125
DN50	PN16	165	102	2	18	4	18	125
DN50	PN25	165	102	2	20	4	18	125
DN50	PN40	165	102	2	20	4	18	125
DN65	PN2.5	160	110	2	16	4	14	130
DN65	PN6	160	110	2	14	4	14	130
DN65	PN10	185	122	2	18	8	18	145
DN65	PN16	185	122	2	18	4	18	145
DN65	PN25	185	122	2	22	8	18	145
DN65	PN40	185	122	2	22	8	18	145
DN80	PN2.5	190	128	2	18	4	18	150
DN80	PN6	190	128	2	16	4	18	150
DN80	PN10	200	128	2	20	8	18	160
DN80	PN16	200	138	2	20	8	18	160
DN80	PN25	200	138	2	24	8	18	160
DN80	PN40	200	138	2	24	8	18	160
DN100	PN2.5	210	148	2	18	4	18	170
DN100	PN6	210	148	2	16	4	18	170
DN100	PN10	220	158	2	20	8	18	180
DN100	PN16	220	158	2	20	8	18	180
DN100	PN25	235	162	2	24	8	22	190
DN100	PN40	235	162	2	24	8	22	190
DN125	PN2.5	240	178	2	20	4	18	200
DN125	PN6	240	178	2	18	8	18	200
DN125	PN10	250	188	2	22	8	18	210

DN125	PN16	250	188	2	22	8	22	210
DN125	PN25	270	188	2	26	8	26	220
DN125	PN40	270	188	2	26	8	26	220
DN150	PN2.5	265	202	2	20	8	18	225
DN150	PN6	265	202	2	18	8	18	225
DN150	PN10	285	212	2	22	8	22	240
DN150	PN16	285	212	2	22	8	22	240
DN150	PN25	300	218	2	28	8	26	250
DN150	PN40	300	218	2	28	8	26	250
DN200	PN2.5	320	258	2	22	8	18	280
DN200	PN6	320	258	2	20	8	18	280
DN200	PN10	340	268	2	24	8	22	295
DN200	PN16	340	268	2	24	12	26	295
DN200	PN25	360	278	2	30	12	26	310
DN200	PN40	375	285	2	34	12	30	320

4. Electrical Connection

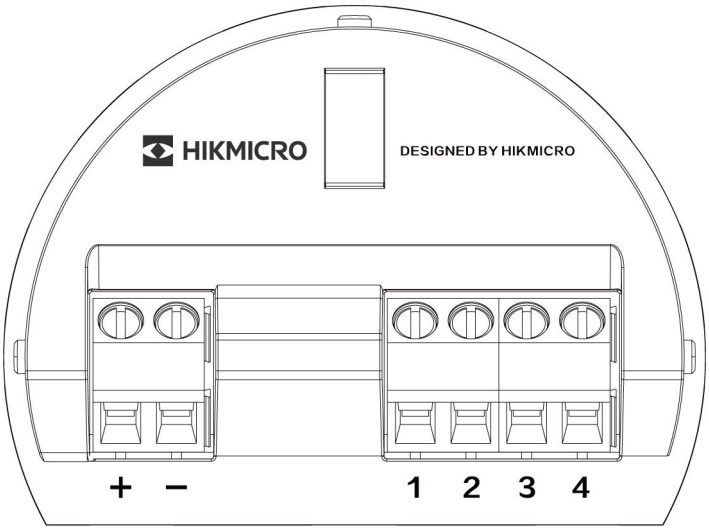

Terminal Block		Description
Power/Signal Terminals	+	Power input/4~20 mA output signal terminal
	-	
Display Terminals	1	VCC
	2	Display A
	3	Display B
	4	GND

5. Installation

Radar level meters are generally used to measure the liquid level or height of the vessels, or to measure the liquid level of rivers and reservoirs. The installation diagram is as follows:

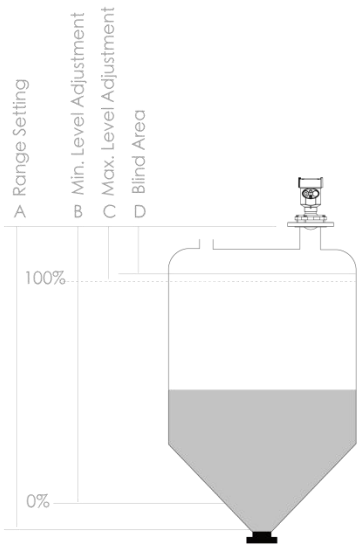

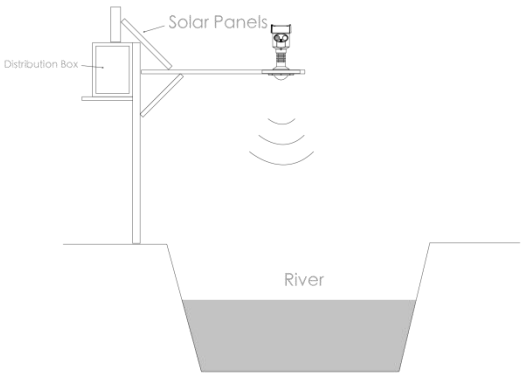

5.1.Mounting Position – Liquids

1. In liquid environment, the level meter should be placed vertically on the medium surface to obtain the best measurement results.

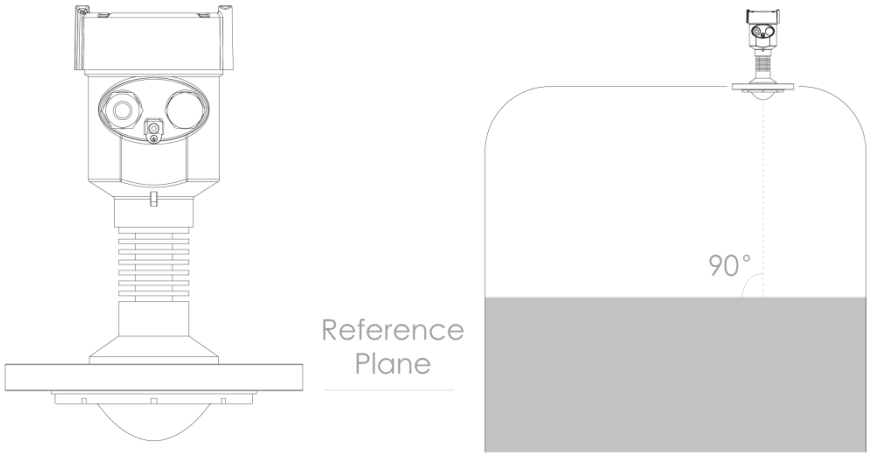

2. For vessels with stirring devices, the level meter needs to be installed away from the stirring device.

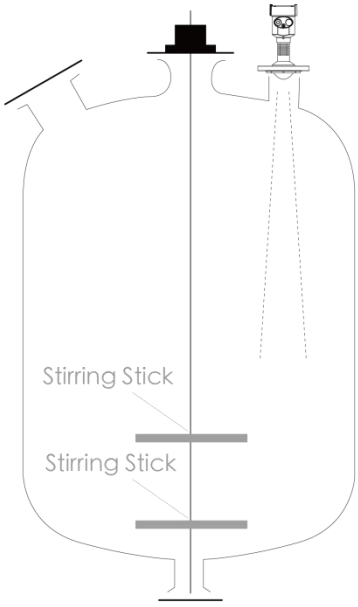

3. For flat-top vessels with conical bottoms, it is recommended that the level meter be installed in the center of the vessel to detect the liquid level down to the bottom.

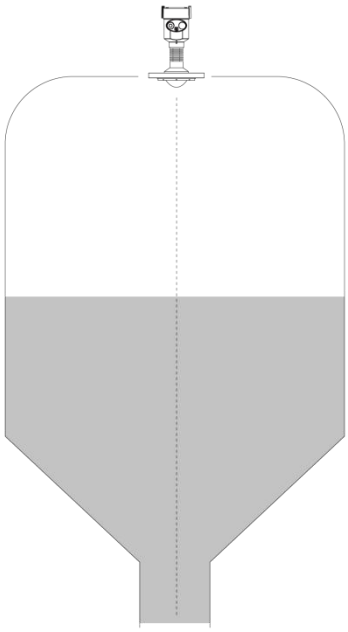

4. For round-top vessels, the level sensor should be installed at 1/2 or 1/3 of the vessel top radius and should not be installed in the center to avoid multiple echoes and inaccurate measurement results.

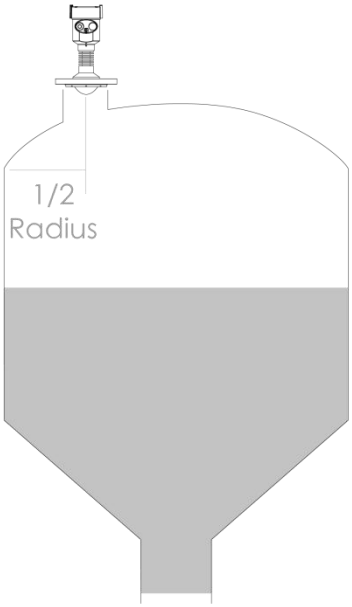

5. If there is a flow of medium in the vessel, do not install the level meter directly above the inlet of the flowing medium to ensure that the flat surface of the medium can be detected.

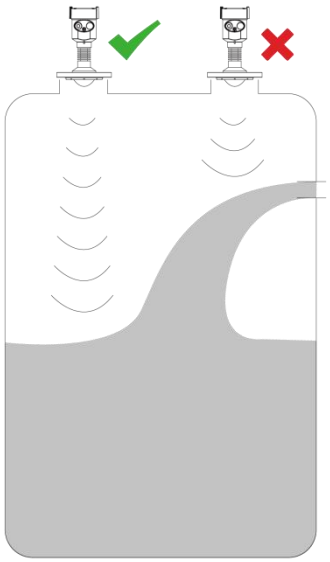

5.2. Mounting Position – Bulk Solids

The reflective surface of solids is different from that of liquids. The installation of level meters should generally follow the principles below:

- Adjust the installation angle so that the radar beam is perpendicular to the surface of the object to be measured to ensure the maximum echo energy
- Make sure there are no interference objects (ladders, steps, etc.) within the beam range of the level meter
- The beam of the level meter should avoid the feed port and be at least 200 mm (7.874 in) away from the vessel wall

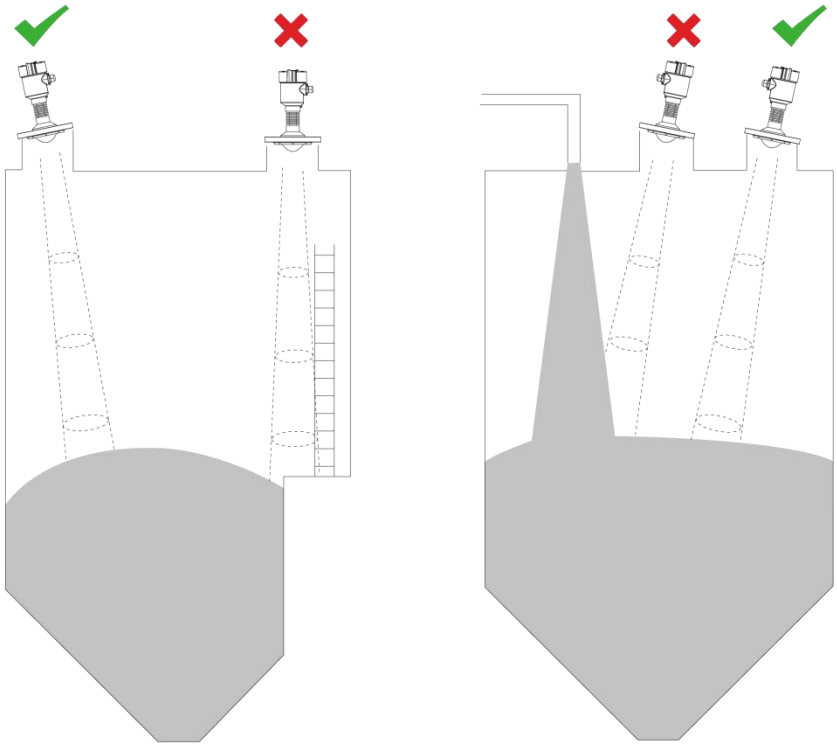

6. Ordering Information

The model code of HIKMICRO Radar Level Meter is explained below. Each item from A to R must be specified at the time of ordering.

A. Base Model-Radar Level Meter
B. Series
C. Measurement Frequency
D. Approvals
E. Output Signal
F. Process Connection Standard
G. Process Connection (Process Fitting)
H. Pressure Standard
I. Flange Sealing Surface Type
J. Process Connection Material
K. Antenna Size
L. Wetted Parts Material
M. Process Temperature
N. Sealing Gasket Material
O. Additional Modules
P. Measuring Range
Q. Display Module
R. Housing
S. Electrical Connection

6.1.Model Code Description

Model Code Position	Model Code	Description
Base Model-Radar Level Meter		
A	HM-LRG	Product Category
Series		
B	10	Product Series
Measurement Frequency		
C	W	80GHz
Approvals		
D	N	Non-explosion proof
D	A	Intrinsic safety (Gas, Zone 0, 1, 2 + Dust, Zone 20, 21, 22)
D	T	Dust, protection by enclosure (Zone 20, 21, 22)
Output Signal		
E	2	Two-wire / 4~20 mA / HART
Process Connection Standard		
F	A	EN 1092-1 (PN Standard Flange)
F	C	ASME B16.5(Class Standard Flange)

F	D	ASME B1.20.1 (NPT Thread)
F	E	BS 84 (G Thread)
F	N	None
Process Connection (Process Fitting)		
G	L1	G1½
G	L2	G3/4
G	L3	NPT 3/4
G	L4	NPT 1½
G	F1	DN50 (2'')
G	F2	DN65 (2.5'')
G	F3	DN80 (3'')
G	F4	DN100 (4'')
G	F5	DN125 (5'')
G	F6	DN150 (6'')
G	F7	DN200 (8")
G	M1	Mounting strap
G	N	None
Pressure Standard		
H	0	PN2.5
H	4	PN16
H	6	PN40
H	B	Class 150
Flange Sealing Surface Type		
I	N	None
I	A	RF (Raised Face)
Process Connection Material		
J	1	PTFE
J	2	PP
J	3	304 Stainless steel
J	4	316L Stainless steel

Antenna Size		
K	A	74 mm (3°)
K	B	42 mm (6°)
K	C	34 mm (8°)
K	D	14.5mm (14°)
Wetted Parts Material		
L	1	PTFE
L	2	PP
L	3	304 Stainless steel + PP
L	4	316L Stainless steel + PEEK
L	5	304 Stainless steel + PEEK
L	6	304 Stainless steel + PTFE
L	7	316L Stainless steel + PTFE
Process Temperature		
M	B1	-40~80 ℃
M	B2	-20~80 ℃
M	B3	-40~150 ℃
M	B4	-20~150 ℃
M	B5	-40~200℃
M	B7	-40~250℃
Sealing Gasket Material		
N	A	FKM (-20-150 ℃)
N	C	EPDM (-40~150 ℃)
N	D	VMQ (-40~250 ℃)
N	E	NBR (-35~100 ℃)
N	N	None
Additional Modules		
O	N	None
O	G	Purge module + Swiveling holder
Measuring Range		

P	010	10 m
P	030	30 m
P	050	50 m
P	120	120 m
Display Module		
Q	A	LCD, mechanical buttons, with Bluetooth
Housing		
R	L	Single chamber, aluminum alloy AlSi10Mg
Electrical Connection		
S	1	M20*1.5
S	2	1/2" NPT

HIKMICRO

6.2. Selection Table

Radar Level Meter

X X X X X X X X X X X X X X X X X X X X

Series
10 Series 10

Measurement Frequency
80GHz W

Approvals
Non-explosion proof N
Intrinsic safety (Gas, Zone 0, 1, 2 + Dust, Zone 20, 21, 22) A
Dust, protection by enclosure (Zone 20, 21, 22) T

Output Signal
Two-wire / 4~20 mA / HART 2

Process Connection Standard
EN 1092-1 (PN Standard Flange) A
ASME B16.5(Class Standard Flange) C
ASME B1.20.1 (NPT Thread) D
BS 84 (G Thread) E
None N

Process Connection
G1½ L1
G3/4 L2
NPT 3/4 L3
NPT 1½ L4
DN50 (2") F1
DN65 (2.5") F2
DN80 (3") F3
DN100 (4") F4
DN125 (5") F5
DN150 (6") F6
DN200 (8") F7
Mounting strap M1
None N

Pressue Standard
PN2.5 0
PN16 4
PN40 6
Class 150 B

Flange Face Type
None N
RF (Raised Face) A

Electrical Connection
1 M20*1.5
2 1/2" NPT

Housing
L Single chamber, aluminum alloy AlSi10Mg

Display Module
A: LCD, mechanical buttons, with Bluetooth

Measuring Range
010 10m
030 30m
050 50m
120 120m

Additional Modules
N None
G Purge module + Swiveling holder

Sealing Gasket Material
A FKM (-20~150℃)
C EPDM (-40~150℃)
D VMQ (-40~250℃)
E NBR (-35~100℃)
N None

Process Temperature
B1 -40~80℃
B2 -20~80℃
B3 -40~150℃
B4 -20~150℃
B5 -40~200℃
B7 -40~250℃

Wetted Parts Material
1 PTFE
2 PP
3 304 Stainless steel + PP
4 316L Stainless steel + PEEK
5 304 Stainless steel + PEEK
6 304 Stainless steel + PTFE
7 316L Stainless steel + PTFE

Antenna Size
A 74 mm (3°)
B 42 mm (6°)
C 34 mm (8°)
D 14.5mm(14°)

Process Connection Material
1 PTFE
2 PP
3 304 Stainless steel
4 316L Stainless steel

HIKMICRO

RADAR LEVEL METER

HIKMICRO Thermography
HIKMICRO
hikmicro_industrial
www.hikmicrotech.com
hikmicro_industrial
info@hikmicrotech.com